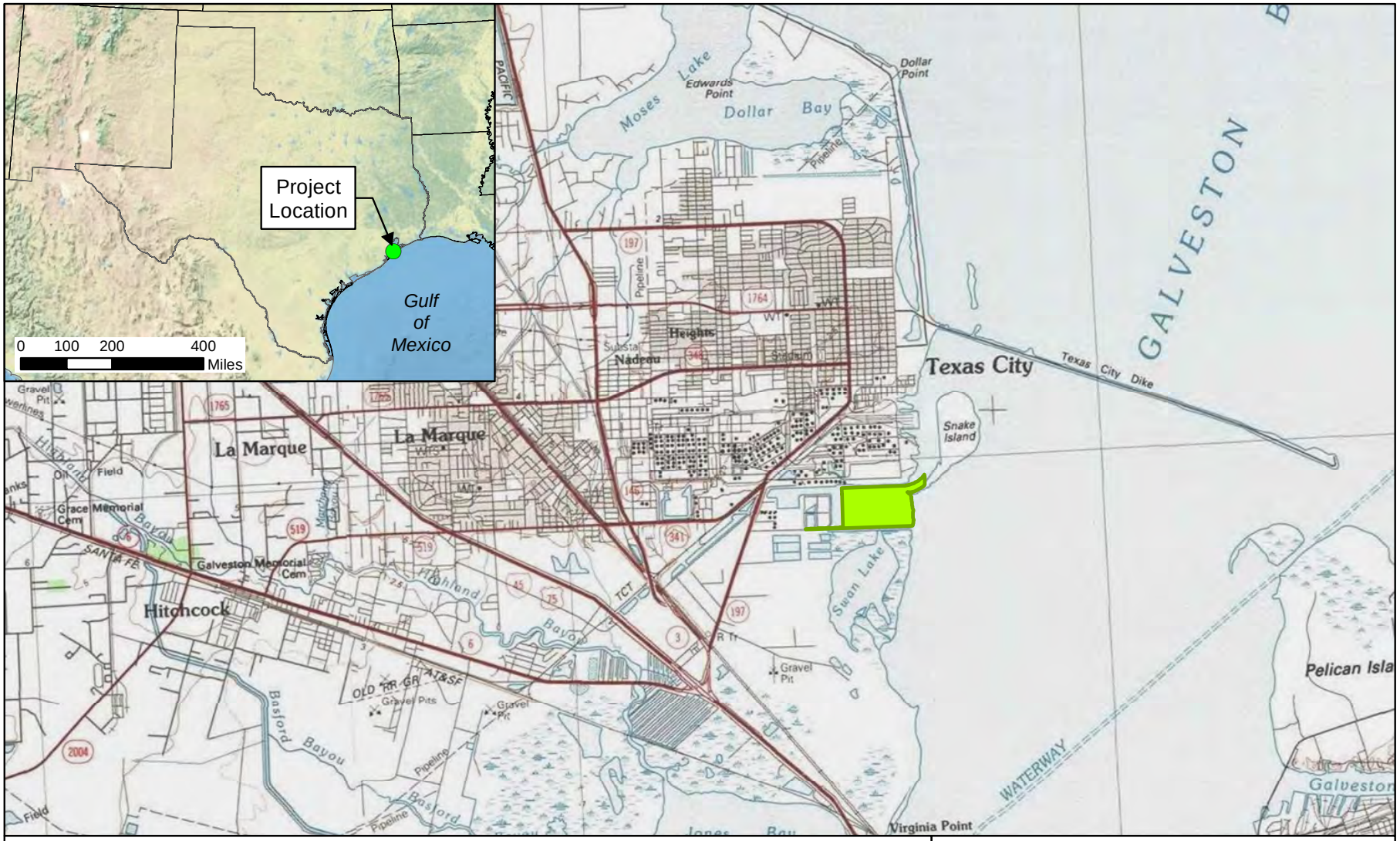

Preferred Alternative

1.Advario TIDE

Location Coordinates:
Latitude: 29.359608
Longitude: -94.897679

SWG-2016-01025

0 0.5 1 2 3 Miles

N

Vicinity Map
Preferred Alternative

Texas City, Galveston County TX

Geosyntec consultants

Austin | June 2022

Figure 1

P:\Projects\Oiltanking\OT TIDE Project\TIDE\IP\alt analysis docs\Advario_AltAnalysis_Figures\Advario_TIDE_Preferred Loc Vic.mxd 6/2/2022 5:38:17 PM

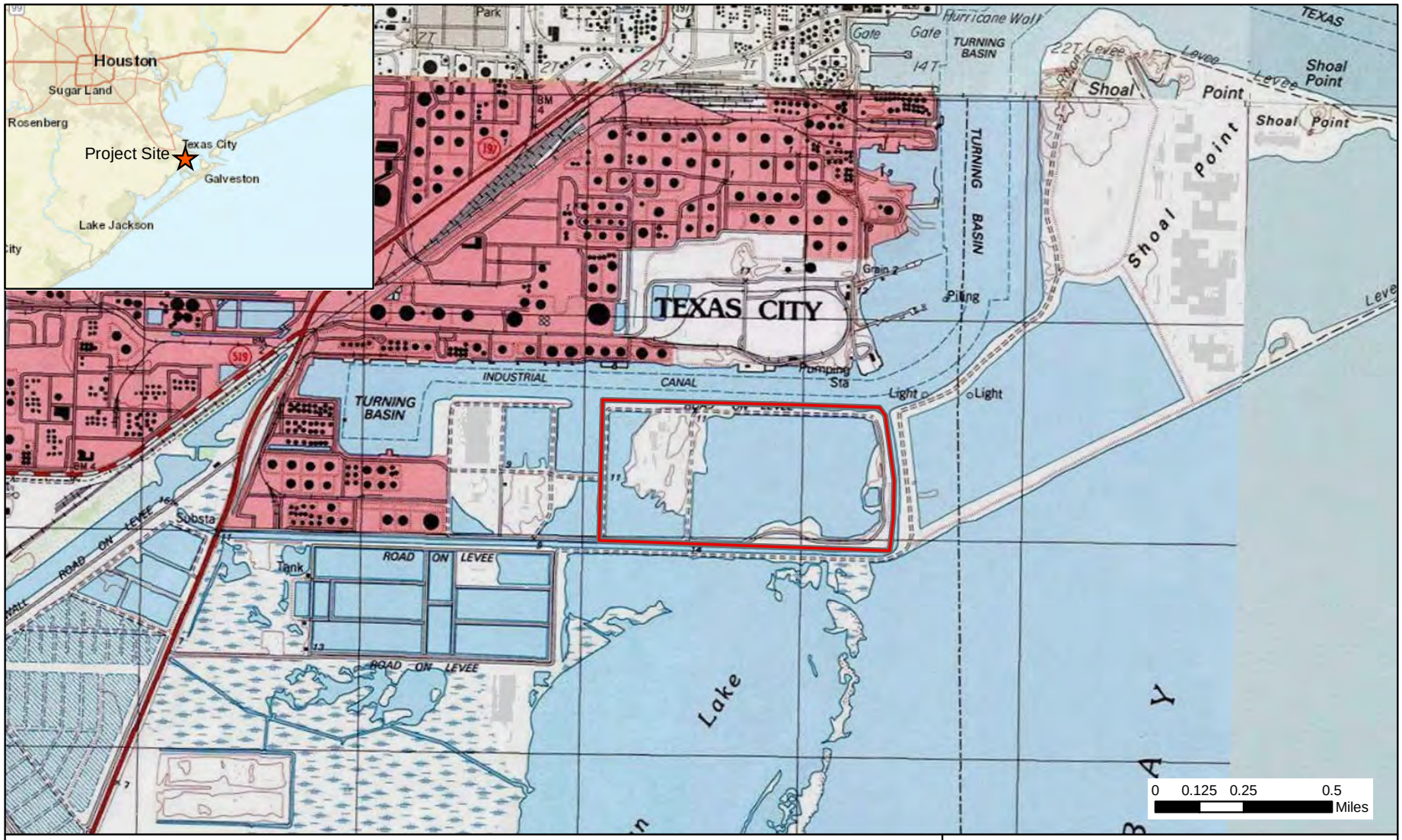

Delineation Boundary

SWG-2016-01025

N

USGS Quad: Virginia Point

Oiltanking TIDE

Vicinity Map

Texas City, Galveston County, TX

Geosyntec consultants

Austin, TX | July 2021

Figure 1

P:\Projects\Oiltanking\OT TIDE Project\TIDE\GIS\OT_TIDE_Vicinity.mxd 7/14/2021 11:50:22 AM

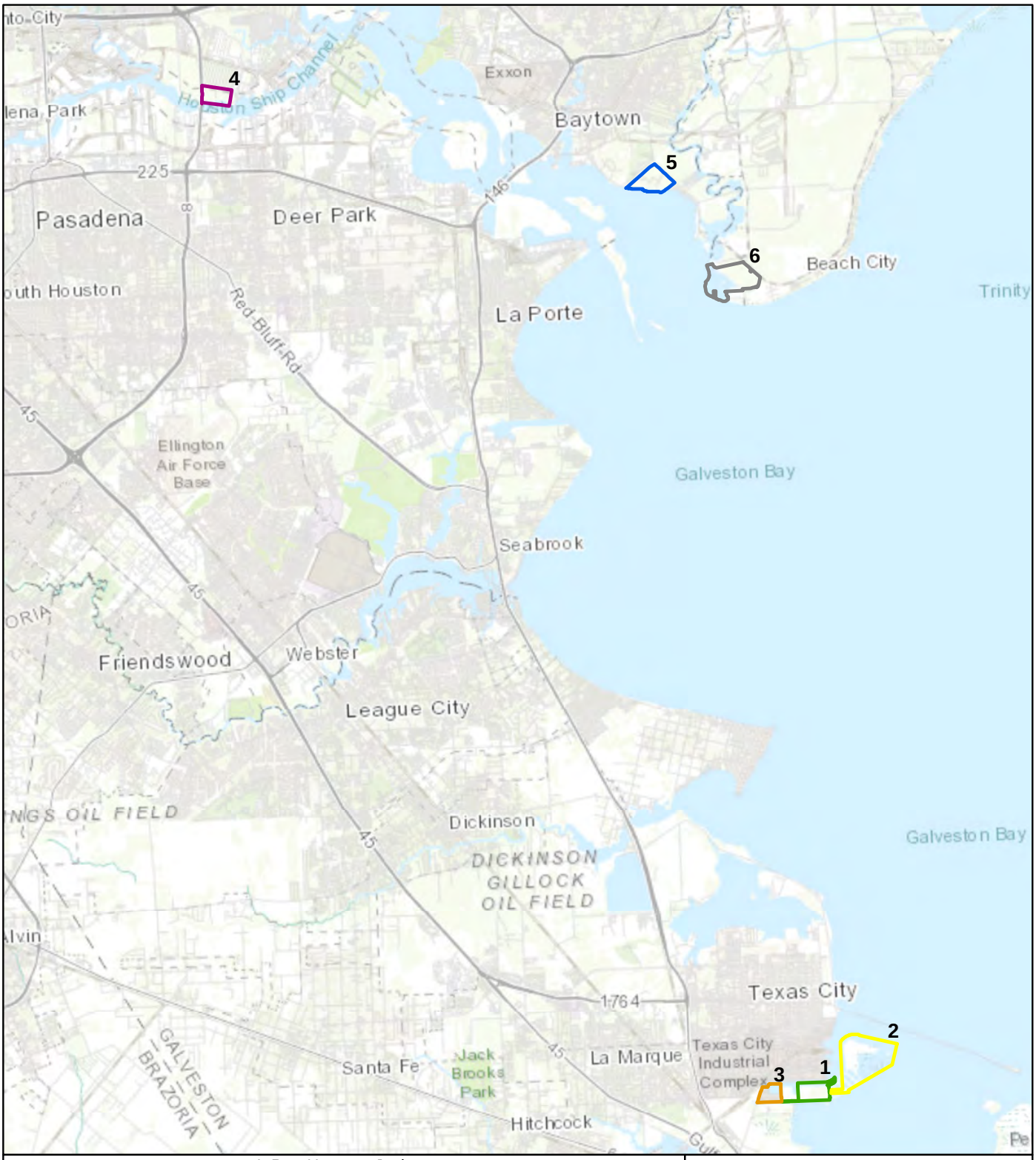

Alternative Locations

- 1.Advario TIDE
- 2. Shoal Point Island
- 3. Advario Dock
- 4. Port Houston Jacintoport Undeveloped Tracts
- 5. Cedar Port Partners Undeveloped Tract
- 6. Cedar Port Partners Undeveloped Tract

N

0 18,400 Feet

SWG-2016-01025

Alternatives Location Map

Galveston, Harris and Chambers Counties Texas

Geosyntec consultants

Austin | June 2022

Figure 2

P:\Projects\Oiltanking\OT TIDE Project\TIDE\IP\alt analysis docs\Advario_AltAnalysis_Figures\Advario_TIDE_Alts Vic.mxd 6/2/2022 5:42:03 PM

Property Owner (Based on 2021 CAD Data)

Adjacent Owners

Owner Name	Mailing Address
Texas City	PO Box 2608, Texas City, TX, 77592
Texas City Terminal Railway Co.	2425 Highway 146 N, Texas City, TX, 77590
Union Carbide Corp./Dow Chemical	332 SH 332 E, Lake Jackson, TX, 77566

N

0 250 500 1,000 Feet

Advario TIDE
SWG-2016-01025

Property Owners

Texas City, Galveston County, TX

Geosyntec consultants

Austin, TX | June 2022

Figure 1

P:\Projects\Oiltanking\OT TIDE Project\TIDE\GIS\TIDE_adj_properties.mxd 6/2/2022 5:18:21 PM

Area 1A - 9 ac.
Area 1B - 5 ac.
Area 1C - 35 ac.
Area 1D - 27 ac.
Lake Institute Fill Area - 42 ac.
Potential Future Development

Note: Areas will be filled to 19ft above existing grade.

N

0 250 500 1,000 Feet

Advario TIDE
SWG-2016-01025

Development Areas

Texas City, Galveston County, TX

Geosyntec consultants

Austin, TX | June 2022

Figure 2

P:\Projects\Oiltanking\OT TIDE Project\TIDE\GIS\Advario_developmentareas.mxd 6/2/2022 5:23:40 PM

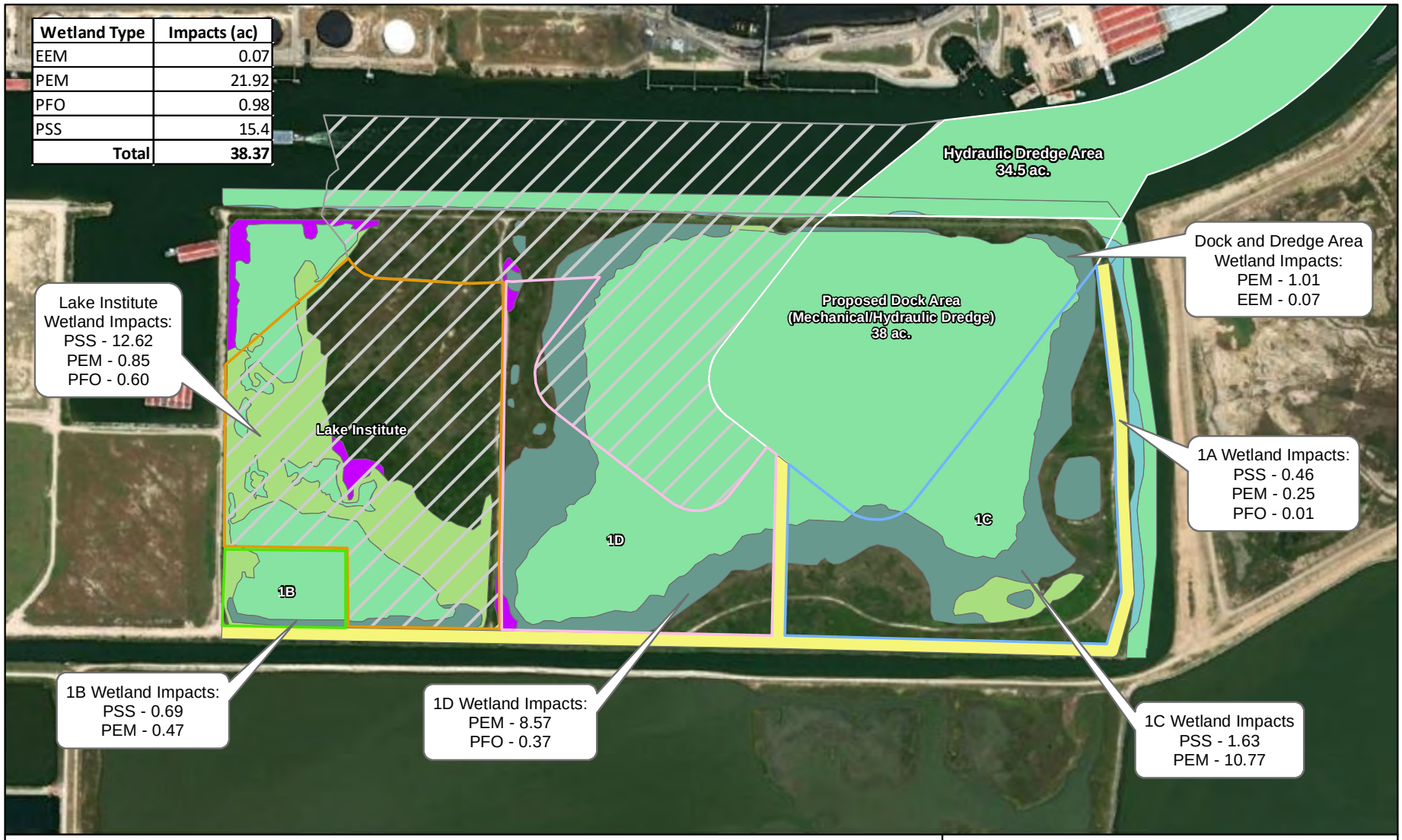

Wetland Type	Impacts (ac)
EEM	0.07
PEM	21.92
PFO	0.98
PSS	15.4
Total	**38.37**

Area 1A - 9 ac.
Area 1B - 5 ac.
Area 1C - 35 ac.
Area 1D - 27 ac.
Lake Institute Fill Area - 42 ac.
Potential Future Development

Other Waters (OW)

Wetland Type

Estuarine Emergent (EEM)
Palustrine Emergent (PEM)
Palustrine Forested (PFO)
Palustrine Scrub-Shrub (PSS)

N

0 250 500 1,000 Feet

Advario TIDE
SWG-2016-01025

Wetland Impacts

Texas City, Galveston County, TX

Geosyntec consultants

Austin, TX | June 2022

Figure 2

P:\Projects\Oiltanking\OT TIDE Project\TIDE\GIS\Advario_wetland_impacts_2a.mxd 6/2/2022 5:26:02 PM

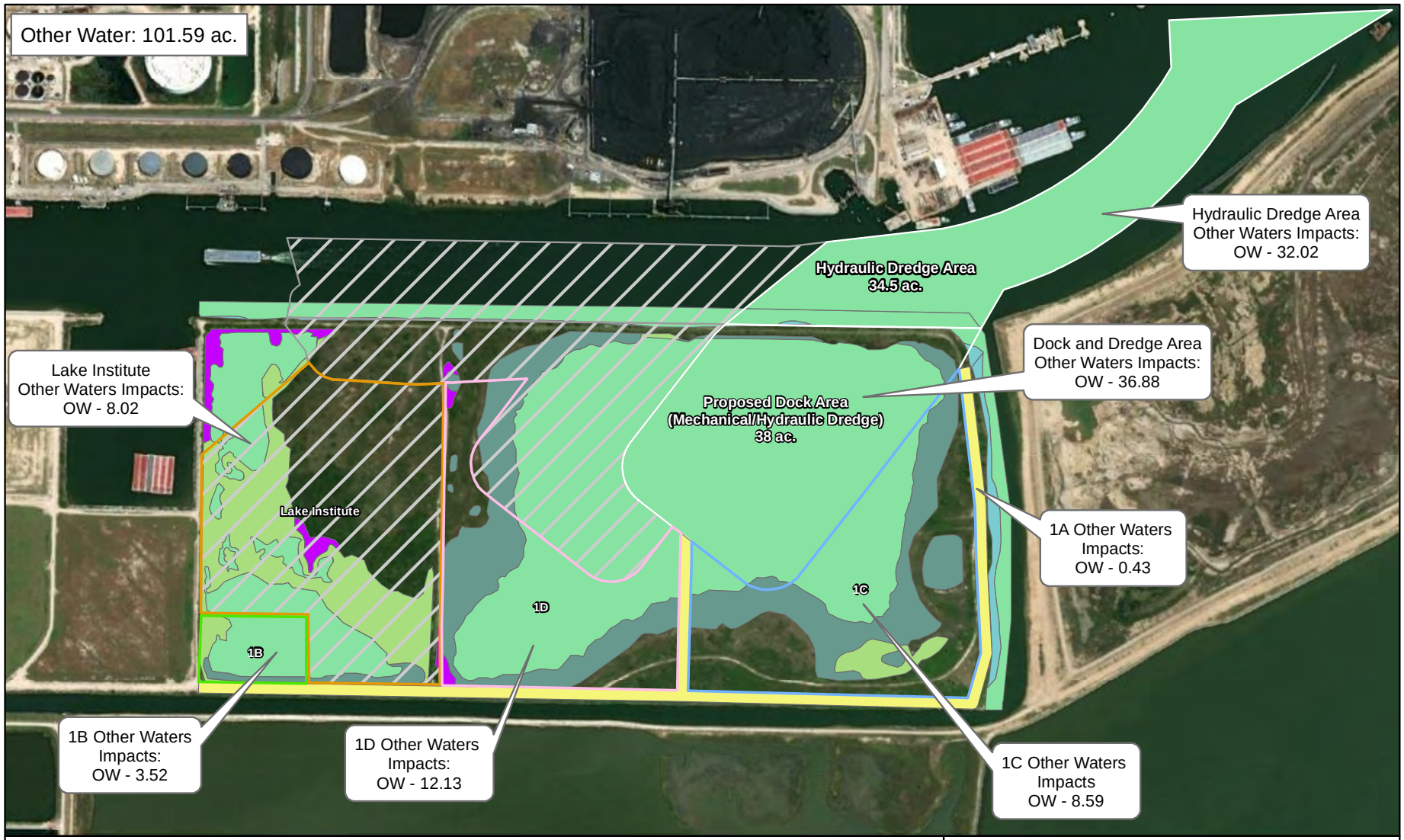

Area 1A - 9 ac.
Area 1B - 5 ac.
Area 1C - 35 ac.
Area 1D - 27 ac.
Lake Institute Fill Area - 42 ac.
Potential Future Development

Other Waters (OW)

Wetland Type

Estuarine Emergent (EEM)
Palustrine Emergent (PEM)
Palustrine Forested (PFO)
Palustrine Scrub-Shrub (PSS)

N

0 250 500 1,000 Feet

Advario TIDE
SWG-2016-01025

Other Waters Impacts

Texas City, Galveston County, TX

Geosyntec consultants

Austin, TX | June 2022

Figure 3

P:\Projects\Oiltanking\OT TIDE Project\TIDE\GIS\Advario_other_waters.mxd 6/2/2022 5:27:01 PM

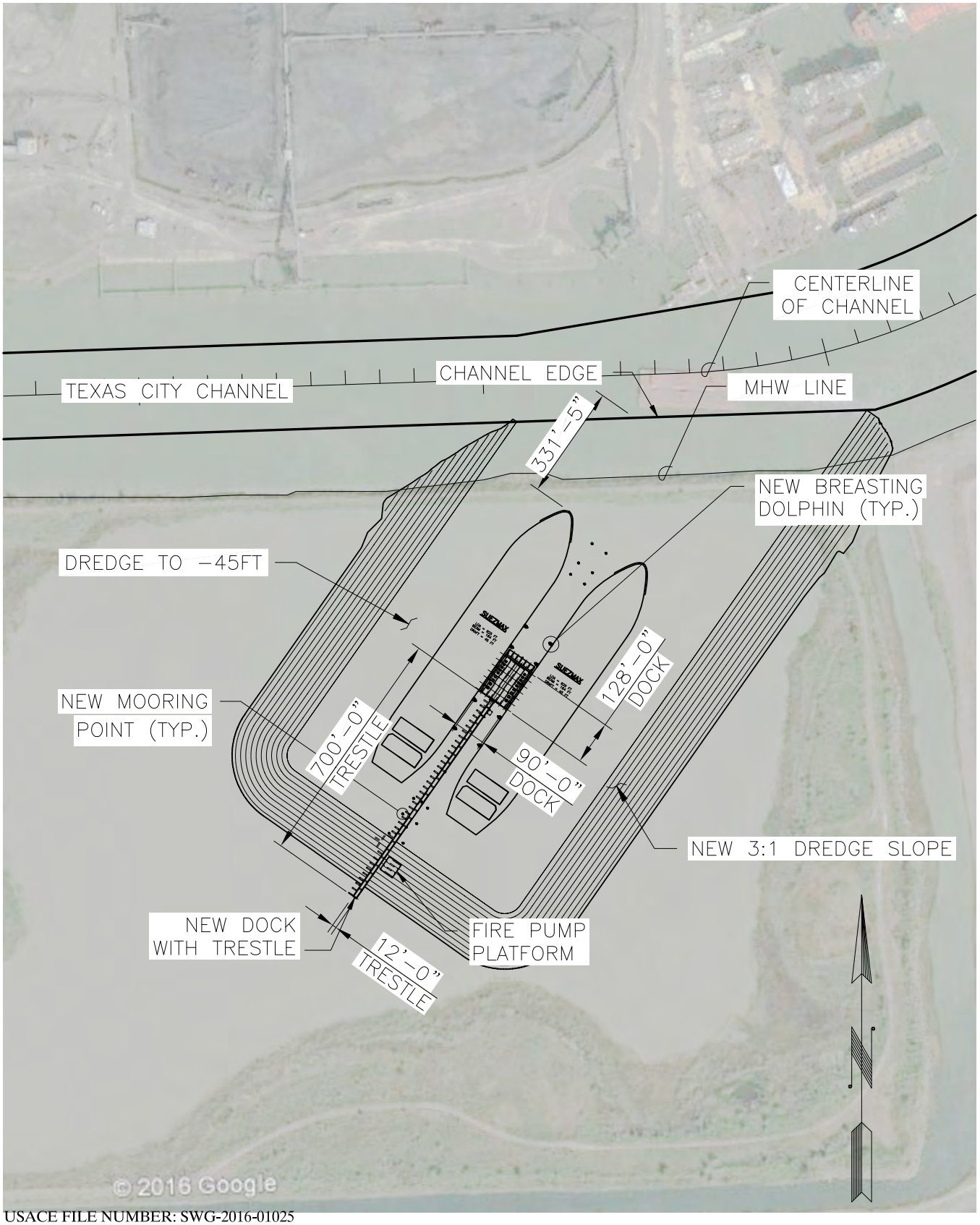

USACE FILE NUMBER: SWG-2016-01025
PRELIMINARY "NOT FOR CONSTRUCTION"

March 14, 2022

SCHNEIDER ENGINEERING & CONSULTING
1715 N. Westshore Blvd.
Suite 500
Tampa, FL 33607
TX. Certificate of Authorization Number, F-14492

OILTANKING T.I.D.E TERMINAL FACILITY
TEXAS CITY, TEXAS

GENERAL SITE PLAN

JOB No. 10P-00262
SCALE 1/32"
SHEET NUMBER S1

I:\Projects\10P00262 - OT- TIDE PERMIT DWG SUPPORT\4.0 Drawings\4.50 Permits\a03_1 General Site Plan.dwg LAYOUT NAME: Plotting PLOTTED: Monday, March 14, 2022 - 3:11pm

HORIZONTAL CONTROL POINTS		
ID	NORTHING	EASTING
DP-6	N 13702296.56	E 3276758.19
DP-7	N 13702647.16	E 3276541.98
DP-8	N 13702545.75	E 3275939.07
DP-9	N 13702262.34	E 3275740.63
DP-10	N 13701323.56	E 3275083.29
DP-11	N 13701248.35	E 3275096.55
DP-12	N 13700843.46	E 3275674.80
DP-13	N 13700856.72	E 3275750.01

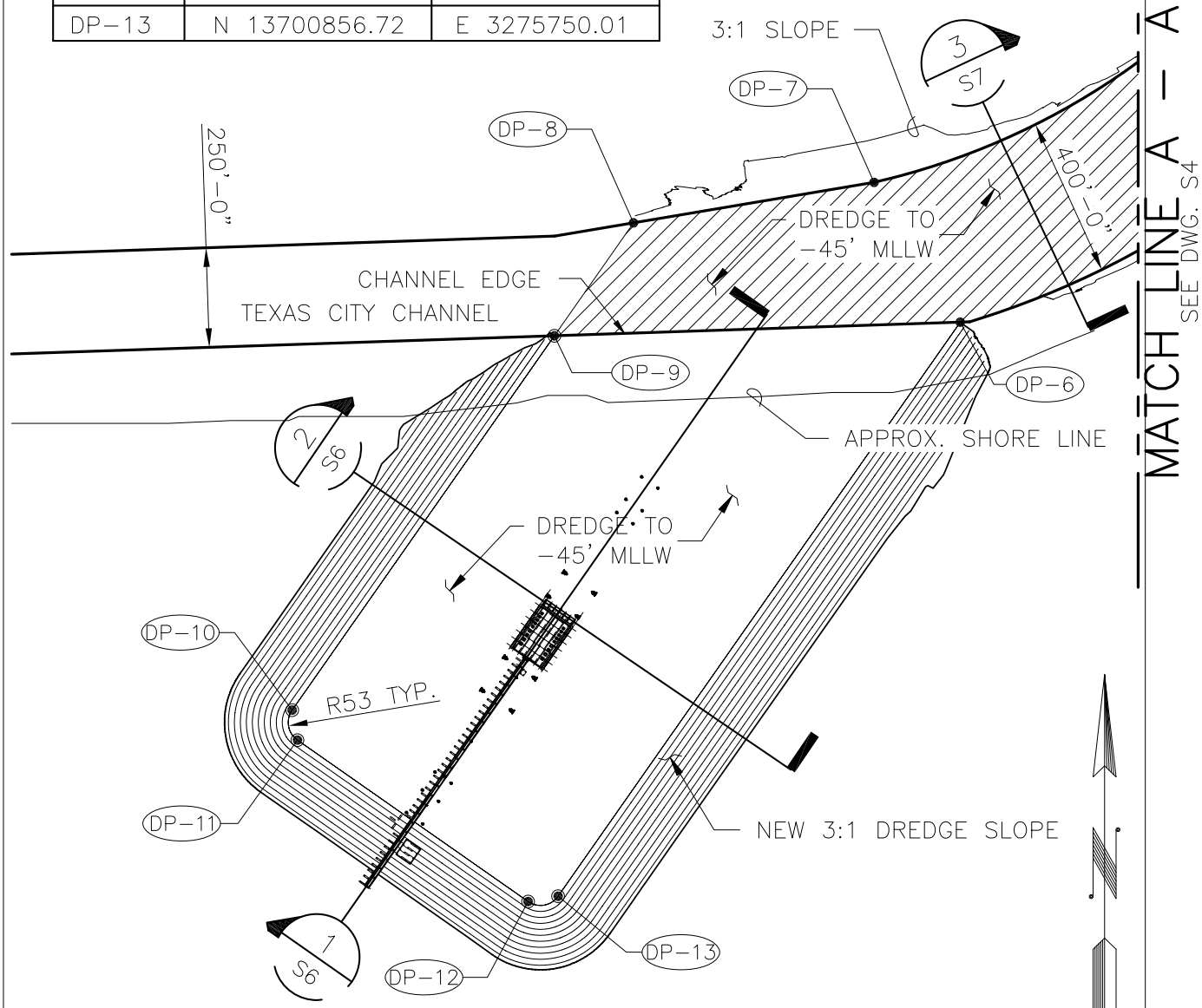

USACE FILE NUMBER: SWG-2016-01025
PRELIMINARY "NOT FOR CONSTRUCTION"

March 14, 2022

SCHNEIDER ENGINEERING & CONSULTING
1715 N. Westshore Blvd.
Suite 500
Tampa, FL 33607
TX. Certificate of Authorization Number, F-14492

OILTANKING T.I.D.E TERMINAL FACILITY
TEXAS CITY, TEXAS

DREDGING SITE PLAN - 1

JOB No. 10P-00262
SCALE 1/32"
SHEET NUMBER S3

I:\Projects\10P00262 - OT- TIDE PERMIT DWG SUPPORT\4.0 Drawings\4.50 Permits\D1_1 Dredge Site Plan.dwg LAYOUT NAME: Plotting PLOTTED: Monday, March 14, 2022 - 3:13pm

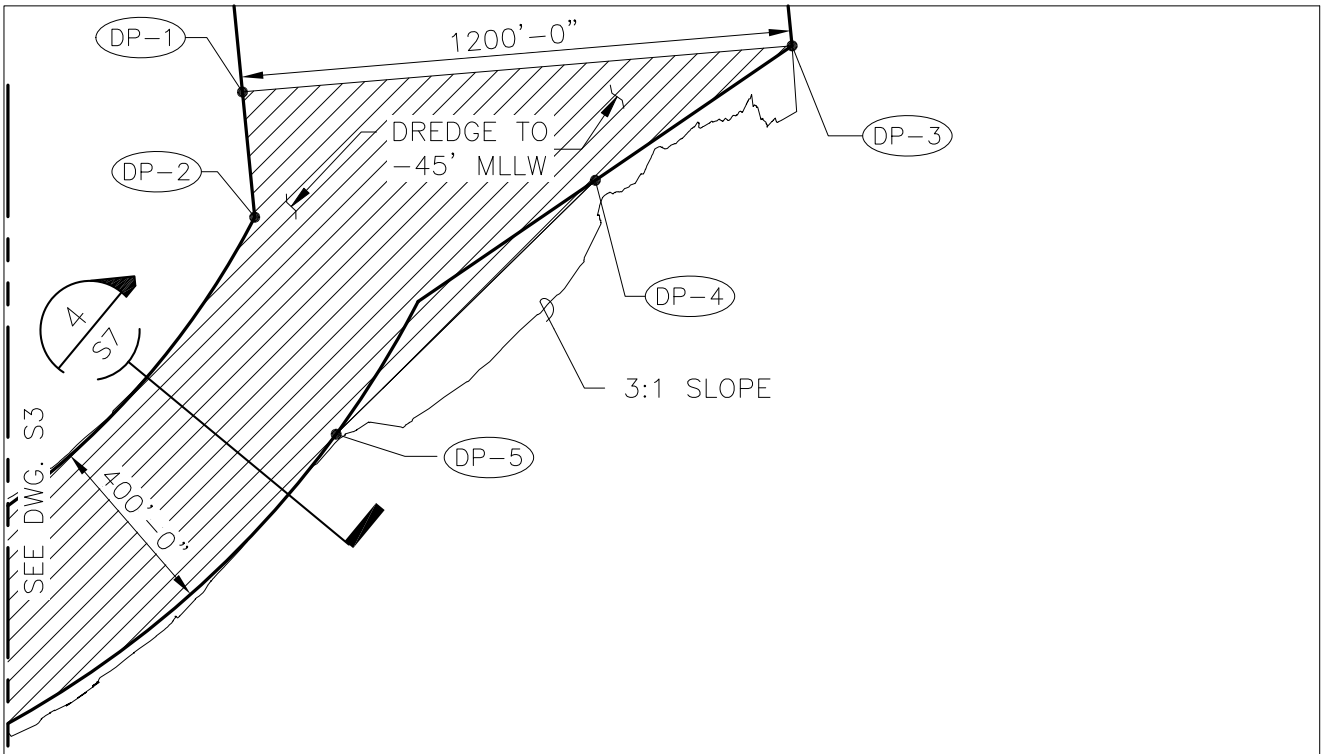

HORIZONTAL CONTROL POINTS		
ID	NORTHING	EASTING
DP-1	N 13703849.69	E 3277714.64
DP-2	N 13703577.39	E 3277741.37
DP-3	N 13703950.24	E 3278910.53
DP-4	N 13703657.65	E 3278482.45
DP-5	N 13703105.25	E 3277918.56

USACE FILE NUMBER: SWG-2016-01025
PRELIMINARY "NOT FOR CONSTRUCTION"

March 14, 2022

SCHNEIDER ENGINEERING & CONSULTING
1715 N. Westshore Blvd.
Suite 500
Tampa, FL 33607
TX. Certificate of Authorization Number, F-14492

OILTANKING T.I.D.E TERMINAL FACILITY
TEXAS CITY, TEXAS

DREDGING SITE PLAN - 2

JOB No. 10P-00262
SCALE 1/32"
SHEET NUMBER S4

I:\Projects\10P00262 - OT- TIDE PERMIT DWG SUPPORT\4.0 Drawings\4.50 Permits\D1_2 Dredge Site Plan -2.dwg LAYOUT NAME: Plotting PLOTTED: Monday, March 14, 2022 - 3:14pm

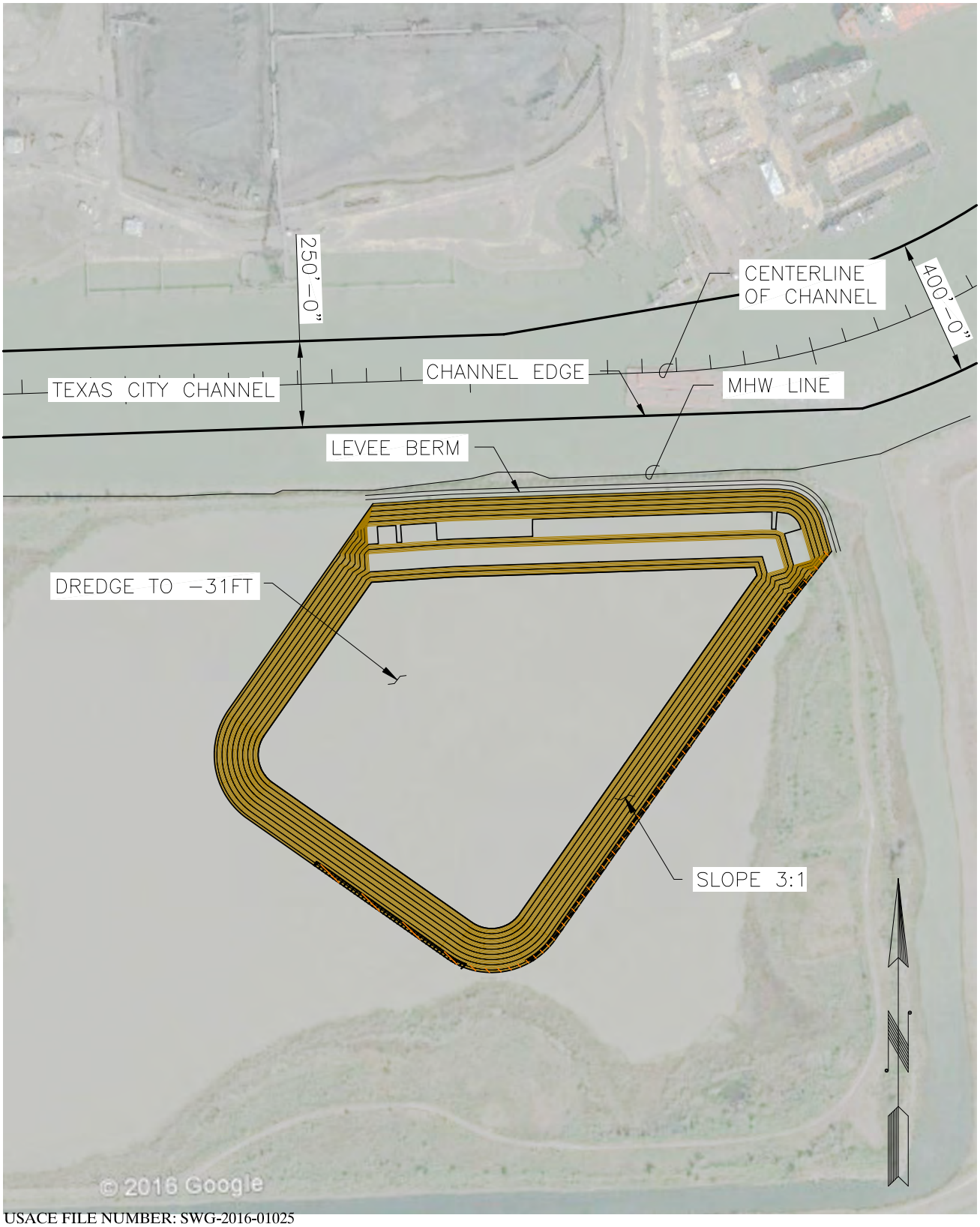

USACE FILE NUMBER: SWG-2016-01025
PRELIMINARY "NOT FOR CONSTRUCTION"

March 14, 2022

SCHNEIDER ENGINEERING & CONSULTING
1715 N. Westshore Blvd.
Suite 500
Tampa, FL 33607
TX. Certificate of Authorization Number, F-14492

OILTANKING T.I.D.E TERMINAL FACILITY
TEXAS CITY, TEXAS

GENERAL SITE PLAN – DREDGE IN DRY

JOB No. 10P-00262
SCALE 1/32"
SHEET NUMBER S2

I:\Projects\10P00262 – OT– TIDE PERMIT DWG SUPPORT\4.0 Drawings\4.50 Permits\aG3_1 General Site Plan_Dredge In Dry.dwg LAYOUT NAME: Plotting PLOTTED: Monday, March 14, 2022 – 2:44pm

HORIZONTAL CONTROL POINTS		
ID	NORTHING	EASTING
DID-1	N 13700850.51	E 3275800.59
DID-2	N 13700803.37	E 3275653.89
DID-3	N 13701212.79	E 3275068.94
DID-4	N 13701362.52	E 3275055.63
DID-5	N 13701793.43	E 3275357.36
DID-6	N 13701836.84	E 3276469.02
DID-7	N 13701813.15	E 3276475.90

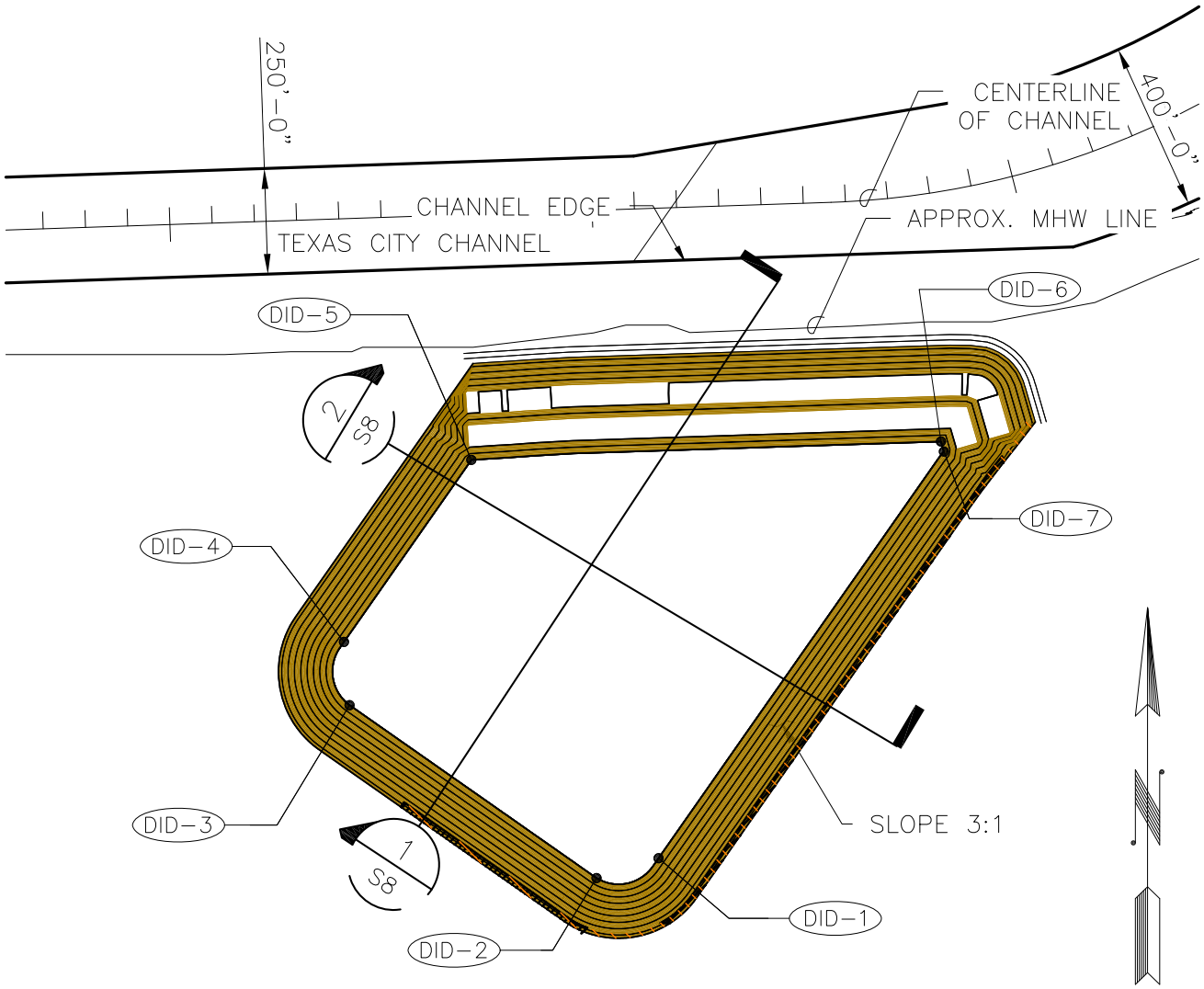

USACE FILE NUMBER: SWG-2016-01025
PRELIMINARY "NOT FOR CONSTRUCTION"

March 14, 2022

SCHNEIDER ENGINEERING & CONSULTING
1715 N. Westshore Blvd.
Suite 500
Tampa, FL 33607
TX. Certificate of Authorization Number, F-14492

OILTANKING T.I.D.E TERMINAL FACILITY
TEXAS CITY, TEXAS

GENERAL SITE PLAN – DREDGE IN DRY

JOB No. 10P-00262
SCALE 1/32"
SHEET NUMBER S5

I:\Projects\10P00262 – OT– TIDE PERMIT DWG SUPPORT\4.0 Drawings\4.50 Permits\D1_2 Dredge Site Plan_In the Dry.dwg LAYOUT NAME: Plotting PLOTTED: Monday, March 14, 2022 – 3:15pm

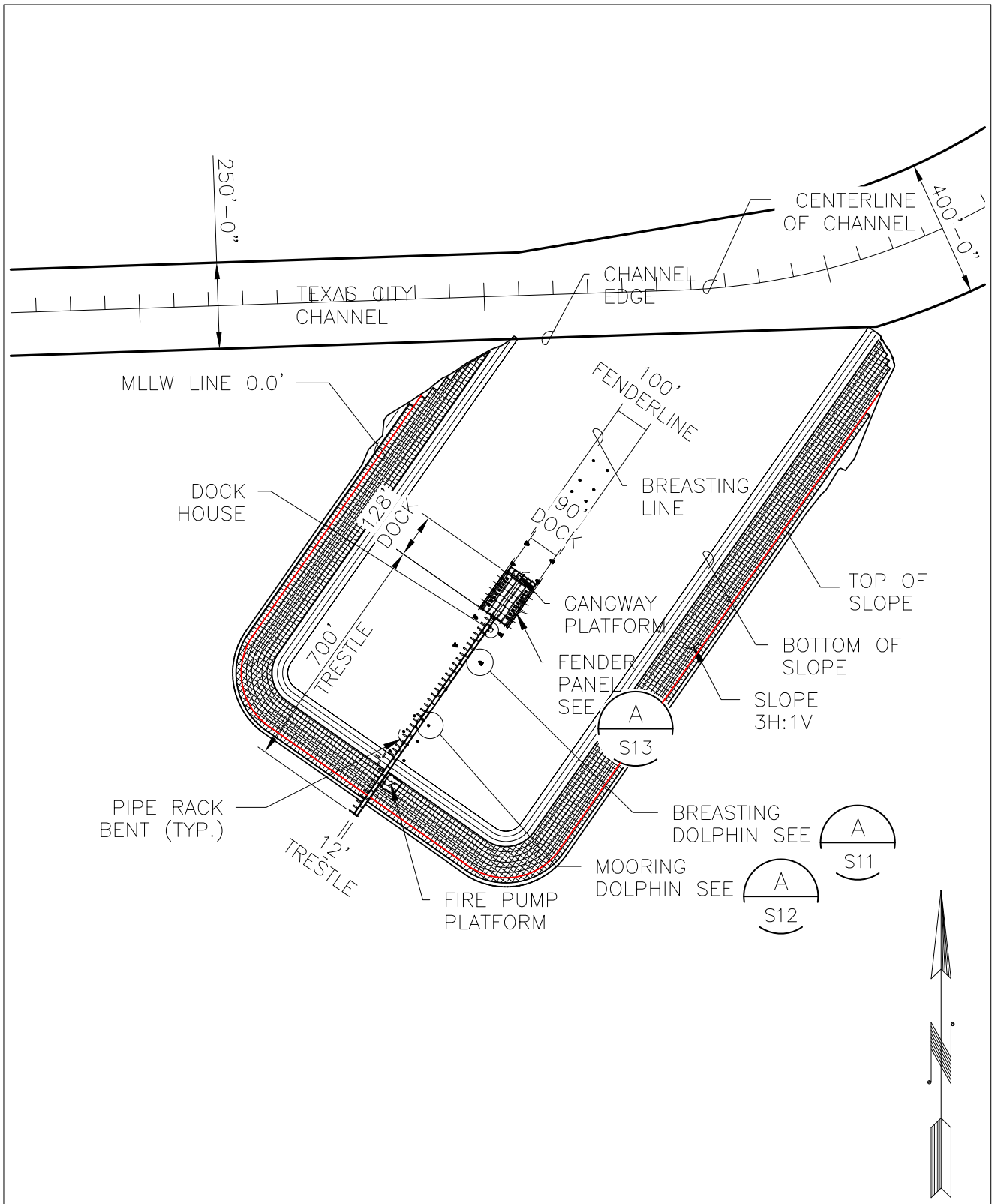

USACE FILE NUMBER: SWG-2016-01025
PRELIMINARY "NOT FOR CONSTRUCTION"

March 14, 2022

SCHNEIDER ENGINEERING & CONSULTING
1715 N. Westshore Blvd.
Suite 500
Tampa, FL 33607
TX. Certificate of Authorization Number, F-14492

OILTANKING T.I.D.E TERMINAL FACILITY
TEXAS CITY, TEXAS

STRUCTURAL SITE PLAN

JOB No. 10P-00262
SCALE 1/32"
SHEET NUMBER S9

I:\Projects\10P00262 - OT- TIDE PERMIT DWG SUPPORT\4.0 Drawings\4.50 Permits\S1_1 Structural Site Plan.dwg LAYOUT NAME: Plotting PLOTTED: Monday, March 14, 2022 - 3:35pm

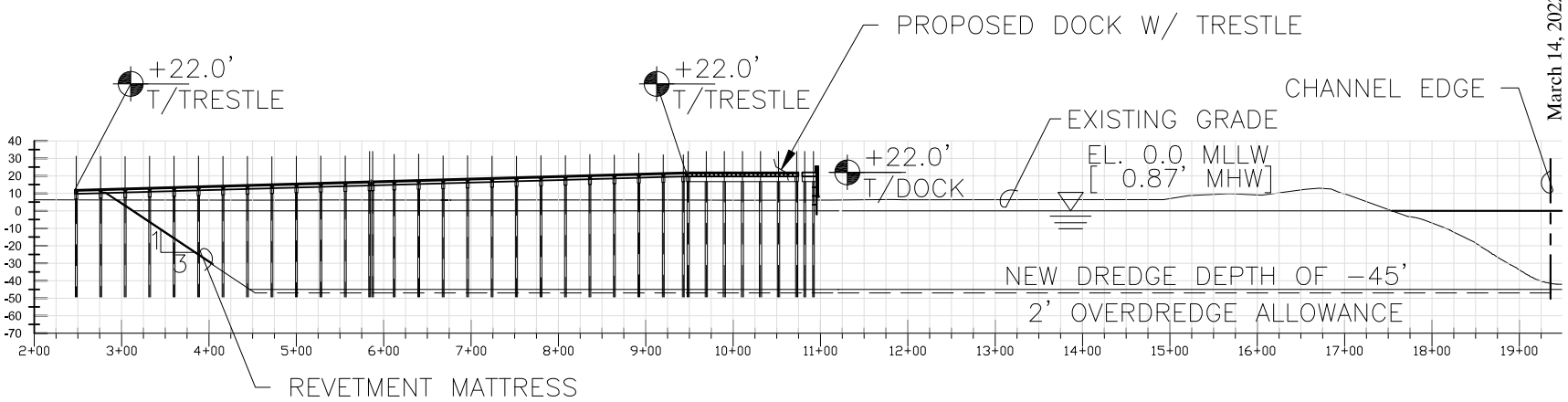

1 S3 TYPICAL DREDGE CUT SECTION

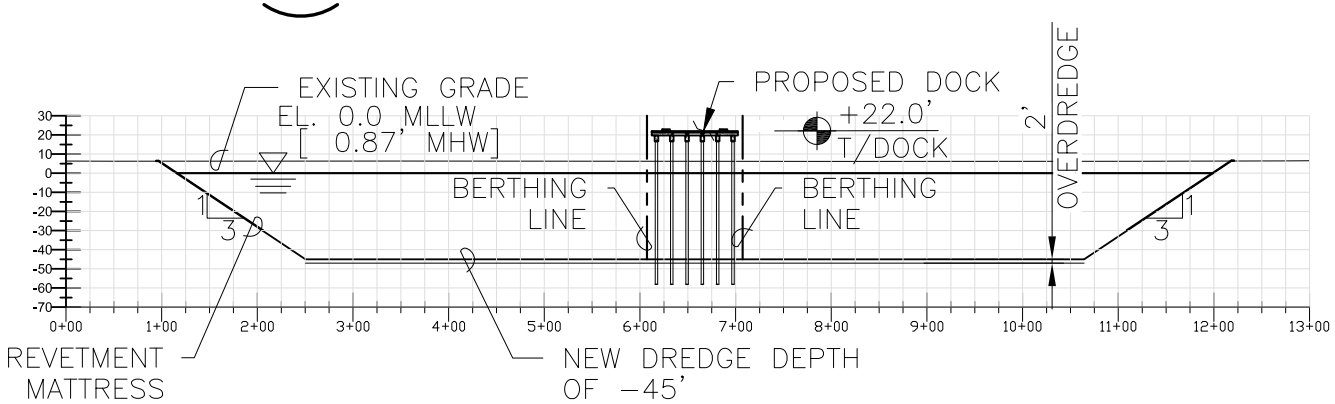

2 S3 TYPICAL DREDGE CUT SECTION

USACE FILE NUMBER: SWG-2016-01025
PRELIMINARY "NOT FOR CONSTRUCTION"

March 14, 2022

JOB No. 10P-00262
SCALE 1/16"
SHEET NUMBER S6

OILTANKING T.I.D.E TERMINAL FACILITY
TEXAS CITY, TEXAS

DREDGING X-SECTIONS - 1

SCHNEIDER
ENGINEERING & CONSULTING
1715 N. Westshore Blvd.
Suite 500
Tampa, FL 33607
TX. Certificate of Authorization Number, F-14492

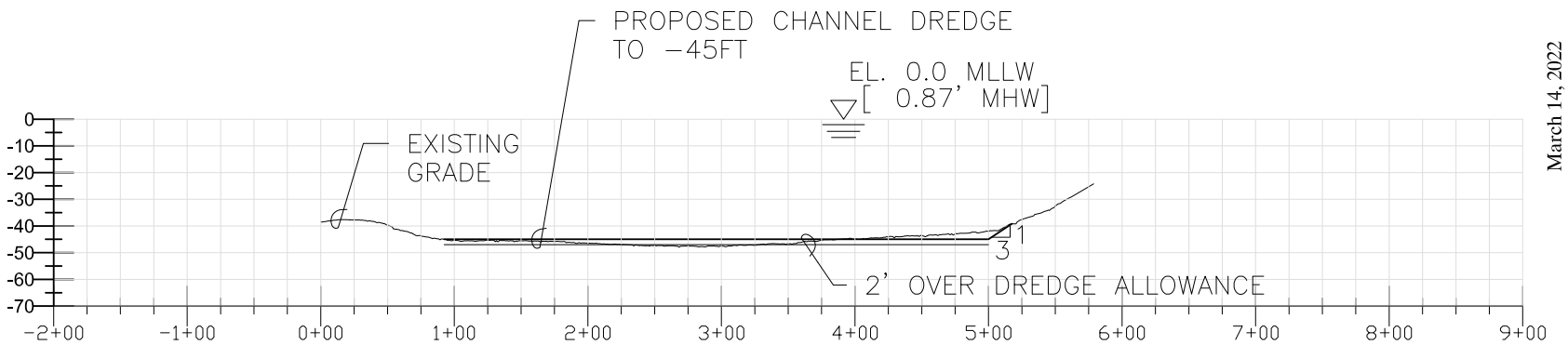

3 S3 TYPICAL DREDGE CUT SECTION

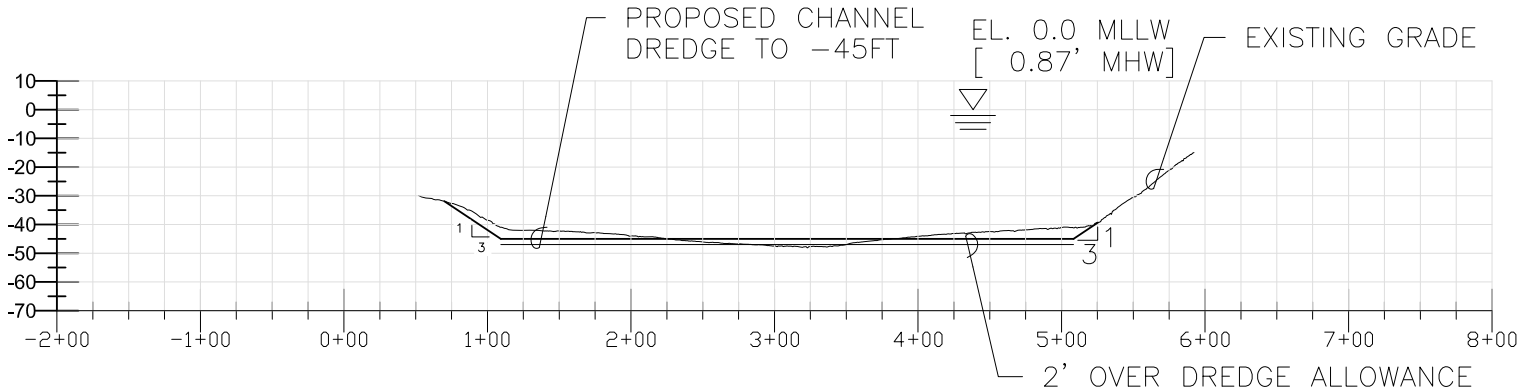

4 S4 TYPICAL DREDGE CUT SECTION

March 14, 2022

USACE FILE NUMBER: SWG-2016-01025
PRELIMINARY "NOT FOR CONSTRUCTION"

JOB No. 10P-00262
SCALE 3/32"
SHEET NUMBER S7

OILTANKING T.I.D.E TERMINAL FACILITY
TEXAS CITY, TEXAS

DREDGING X-SECTIONS - 2

SCHNEIDER ENGINEERING & CONSULTING
1715 N. Westshore Blvd.
Suite 500
Tampa, FL 33607
TX. Certificate of Authorization Number, F-14492

i:\Projects\10P00262 - OT- TDE PERMIT DWG SUPPORT\4.0 Drawings\4.50 Permits\D2_2 Dredge Sections - 2.dwg LAYOUT NAME: Plotting PLOTTED: Monday, March 14, 2022 - 3:33pm

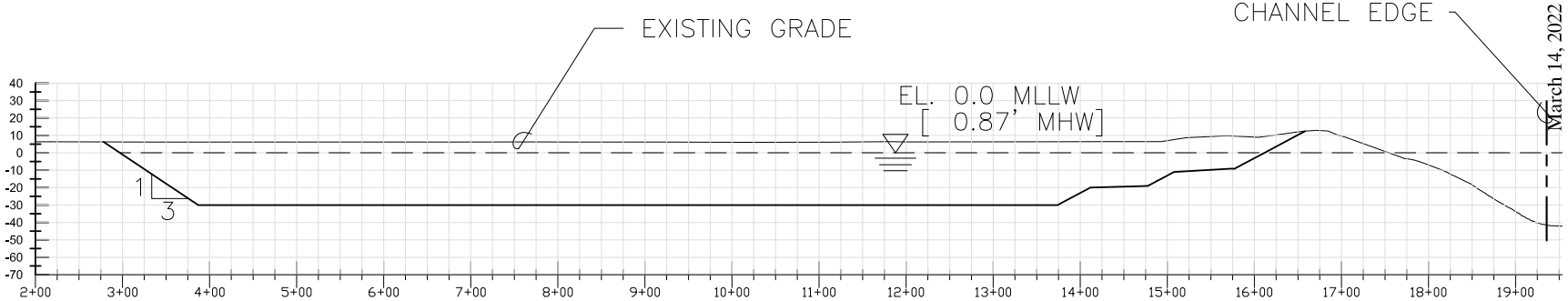

1 S5 TYPICAL DREDGE CUT SECTION

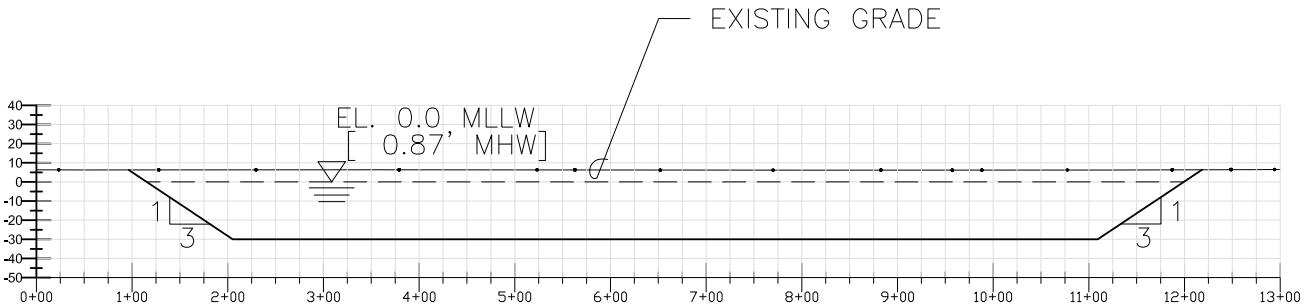

2 S5 TYPICAL DREDGE CUT SECTION

USACE FILE NUMBER: SWG-2016-01025
PRELIMINARY "NOT FOR CONSTRUCTION"

March 14, 2022

JOB No. 10P-00262
SCALE 1/16"
SHEET NUMBER S8

OILTANKING T.I.D.E TERMINAL FACILITY
TEXAS CITY, TEXAS

DREDGING X-SECTIONS - IN THE DRY

SCHNEIDER ENGINEERING & CONSULTING
1715 N. Westshore Blvd.
Suite 500
Tampa, FL 33607
TX. Certificate of Authorization Number, F-14492

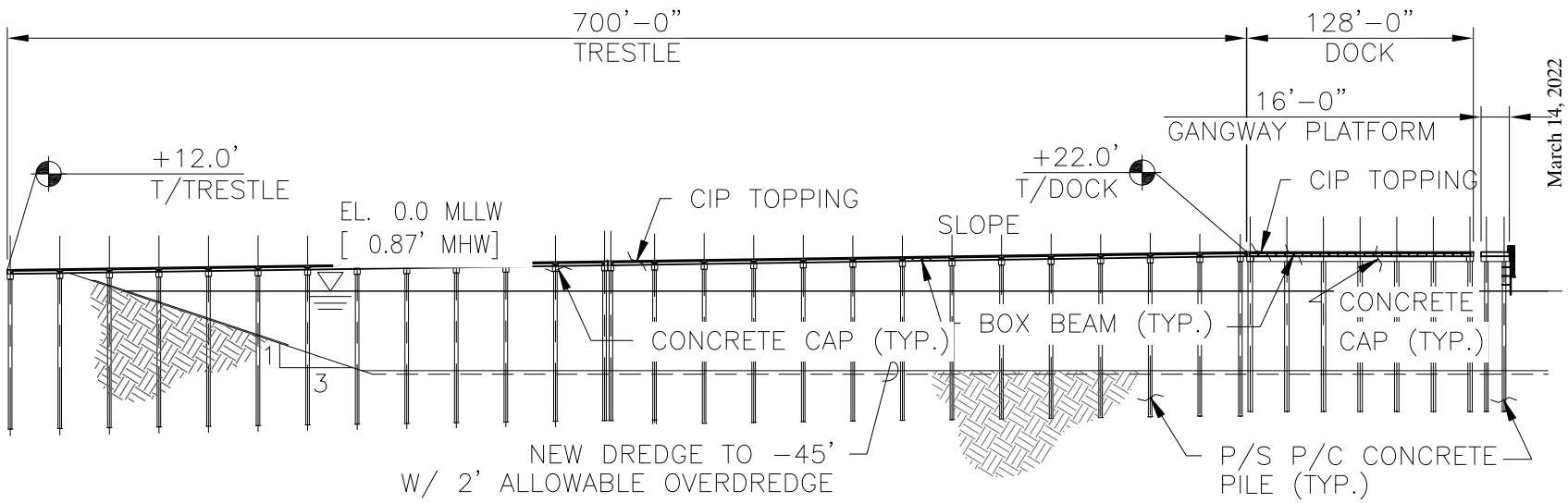

1 TYPICAL PIER SECTION

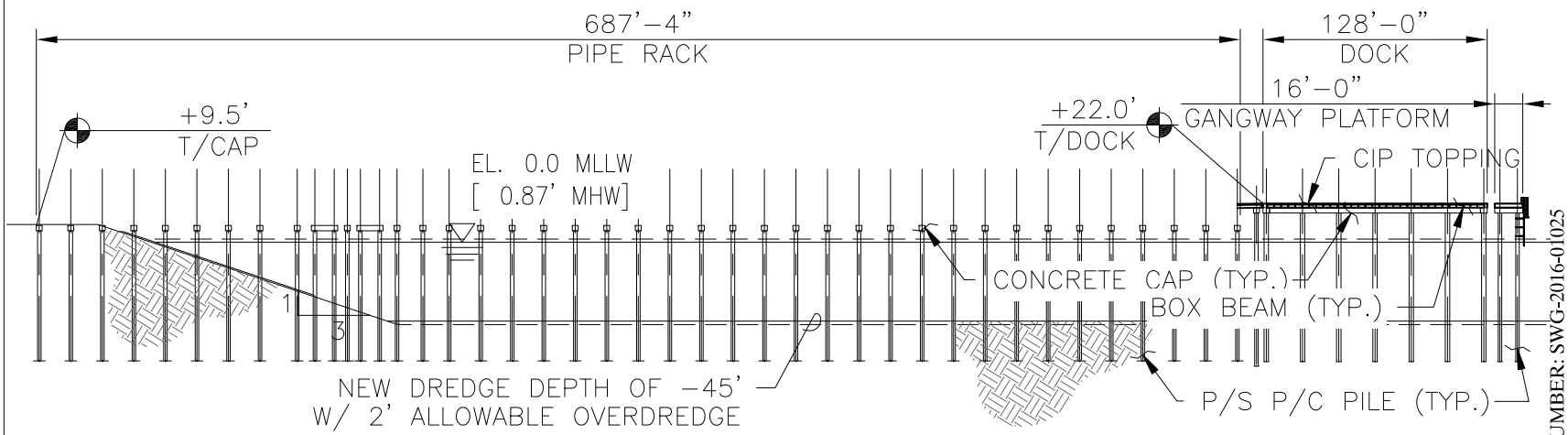

2 TYPICAL PIPERACK SECTION

USACE FILE NUMBER: SWG-2016-01025
PRELIMINARY "NOT FOR CONSTRUCTION"

March 14, 2022

JOB No. 10P-00262
SCALE 1/8"
SHEET NUMBER S10

OILTANKING T.I.D.E TERMINAL FACILITY
TEXAS CITY, TEXAS

TYPICAL SECTIONS

SCHNEIDER
ENGINEERING & CONSULTING
1715 N. Westshore Blvd.
Suite 500
Tampa, FL 33607
TX. Certificate of Authorization Number, F-14492

I:\Projects\10P00262 - OT- TIDE PERMIT DWG SUPPORT\4.0 Drawings\4.50 Permits\S2_1 Typical Sections.dwg LAYOUT NAME: Plotting PLOTTED: Monday, March 14, 2022 - 3:38pm

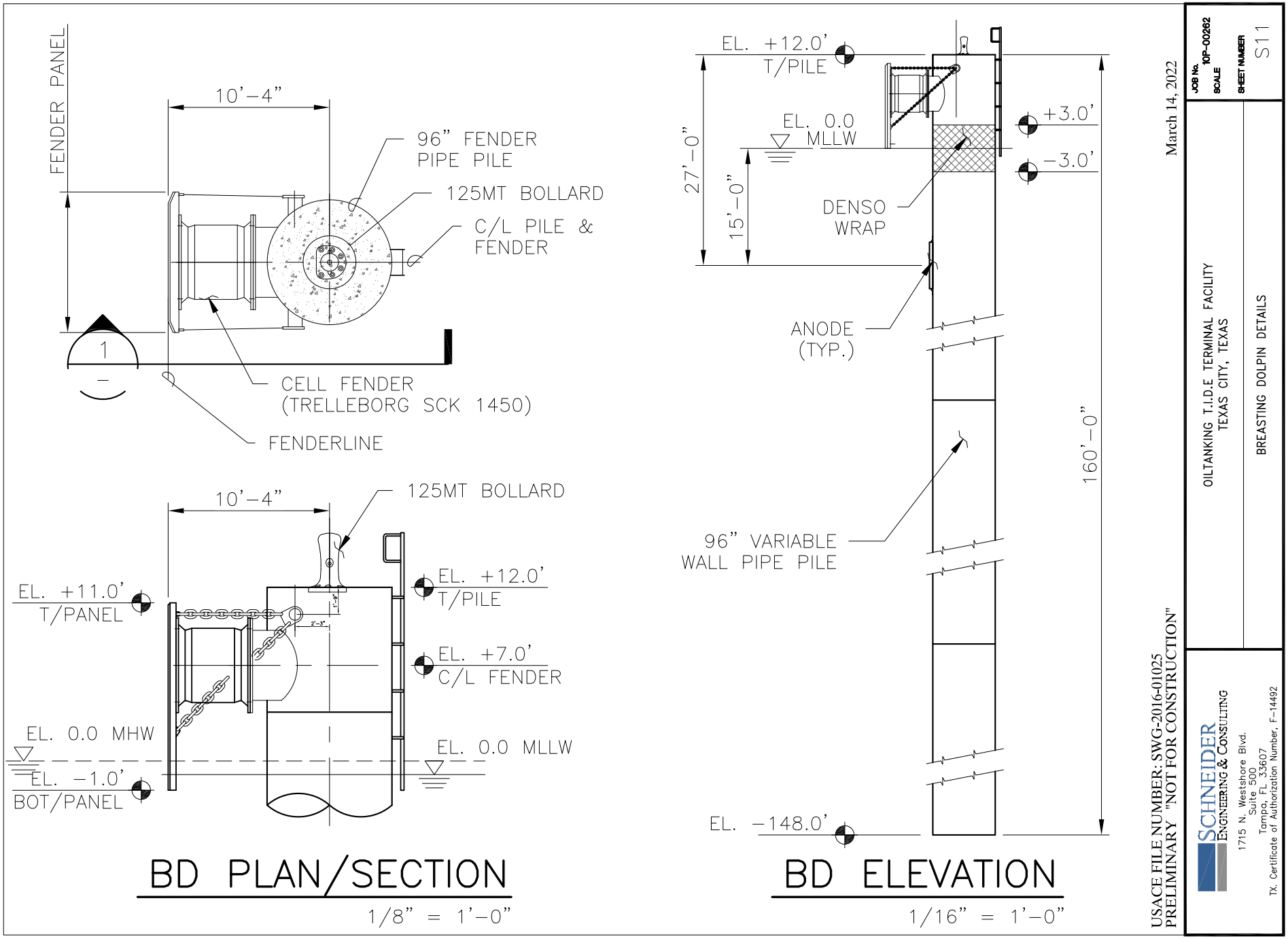

i:\Projects\10P00262 - OT- TDE PERMIT DWG SUPPORT\4.0 Drawings\4.50 Permits\S9_1 Breasting Dolphin.dwg LAYOUT NAME: Plotting PLOTTED: Monday, March 14, 2022 - 3:39pm

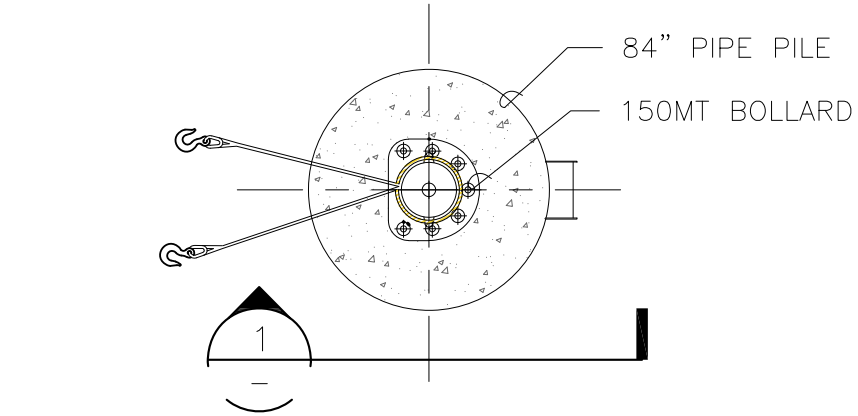

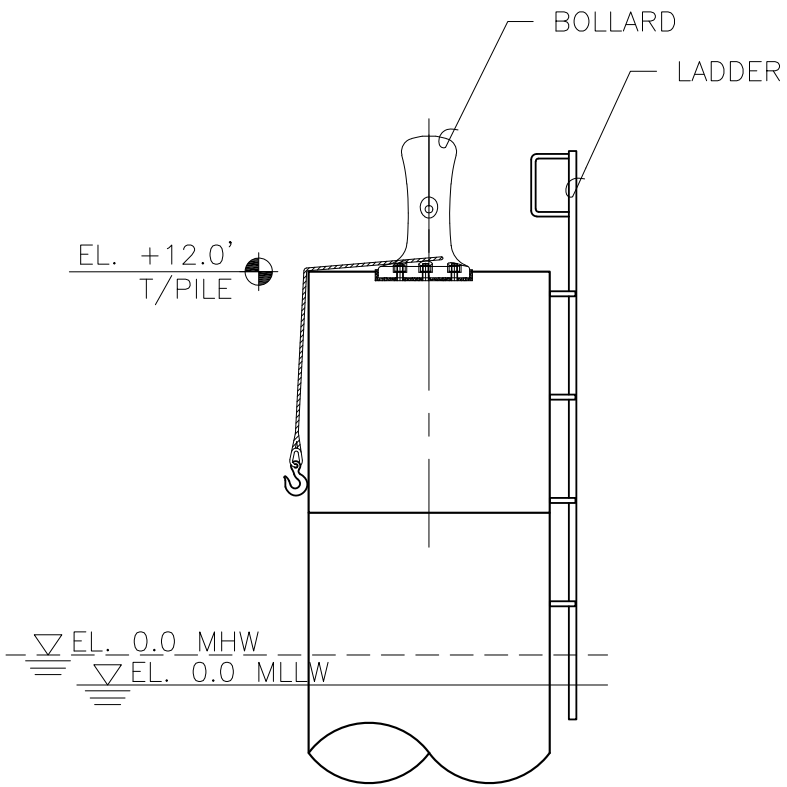

MD PLAN/SECTION

3/16" = 1'-0"

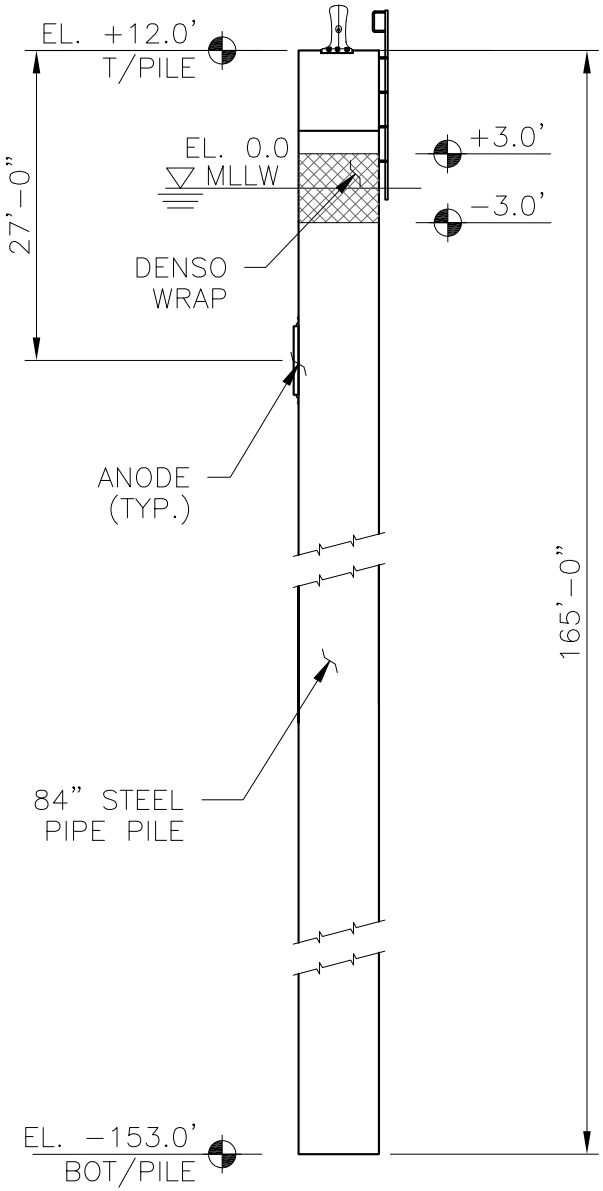

MD ELEVATION

1/16" = 1'-0"

March 14, 2022

USACE FILE NUMBER: SWG-2016-01025
PRELIMINARY "NOT FOR CONSTRUCTION"

JOB No. 10P-00262
SCALE
SHEET NUMBER S12

OILTANKING T.I.D.E TERMINAL FACILITY
TEXAS CITY, TEXAS

MOORING DOLPIN DETAILS

SCHNEIDER
ENGINEERING & CONSULTING
1715 N. Westshore Blvd.
Suite 500
Tampa, FL 33607
TX. Certificate of Authorization Number, F-14492

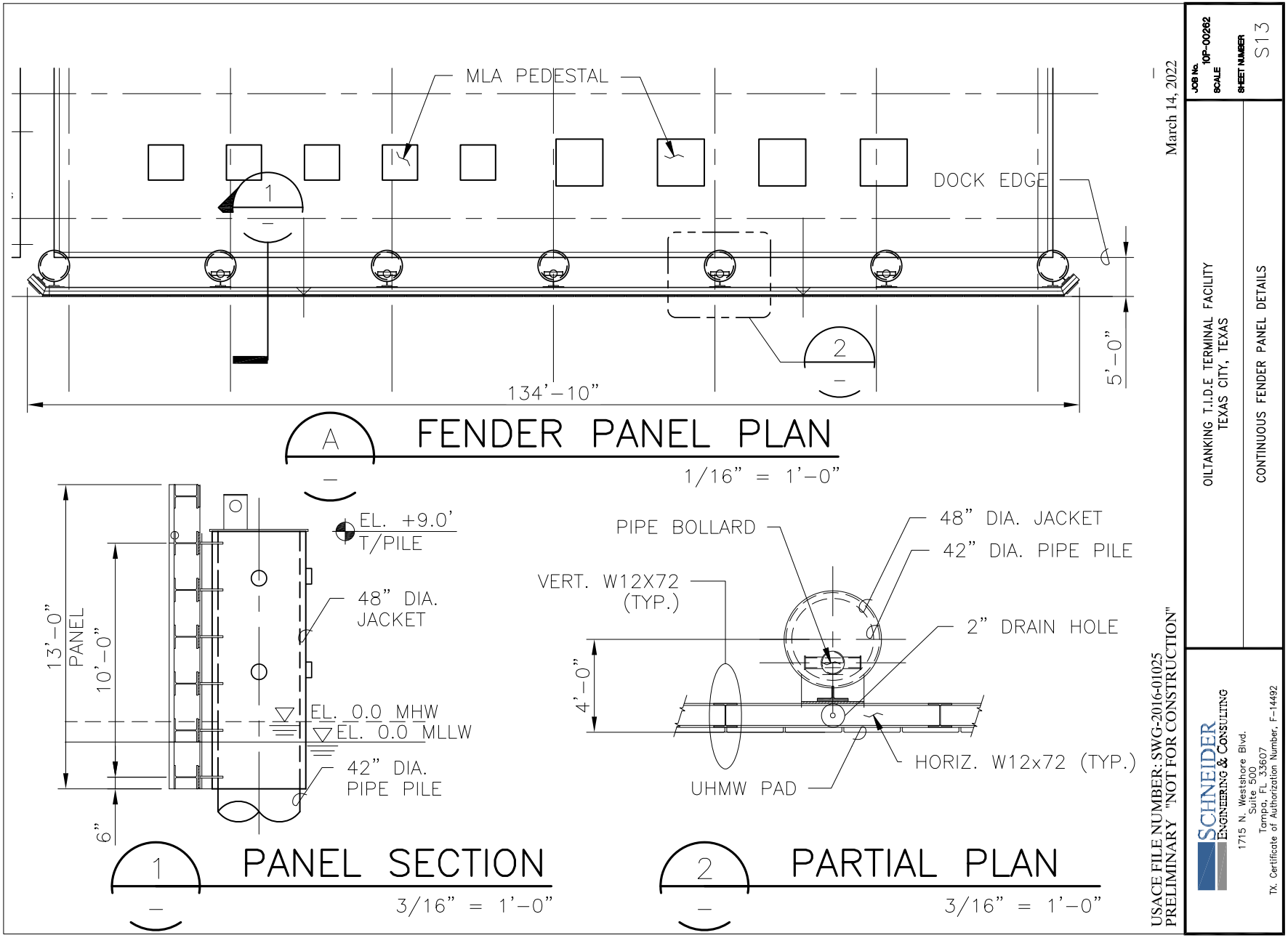
MLA PEDESTAL
DOCK EDGE
1
2
134'-10"
5'-0"
A
FENDER PANEL PLAN
1/16" = 1'-0"
EL. +9.0'
T/PILE
48" DIA.
JACKET
13'-0"
PANEL
10'-0"
EL. 0.0 MHW
EL. 0.0 MLLW
42" DIA.
PIPE PILE
6"
1
PANEL SECTION
3/16" = 1'-0"
PIPE BOLLARD
48" DIA. JACKET
42" DIA. PIPE PILE
VERT. W12X72
(TYP.)
2" DRAIN HOLE
4'-0"
HORIZ. W12x72 (TYP.)
UHMW PAD
2
PARTIAL PLAN
3/16" = 1'-0"
USACE FILE NUMBER: SWG-2016-01025
PRELIMINARY "NOT FOR CONSTRUCTION"
March 14, 2022
JOB No. 10P-00262
SCALE
SHEET NUMBER S13
OILTANKING T.I.D.E TERMINAL FACILITY
TEXAS CITY, TEXAS
CONTINUOUS FENDER PANEL DETAILS
SCHNEIDER
ENGINEERING & CONSULTING
1715 N. Westshore Blvd.
Suite 500
Tampa, FL 33607
TX. Certificate of Authorization Number, F-14492
i:\Projects\10P00262 - OT- TIDE PERMIT DWG SUPPORT\4.0 Drawings\4.50 Permits\S11_1 Cont Fender Panel.dwg LAYOUT NAME: Plotting PLOTTED: Monday, March 14, 2022 - 2:32pm

Placement Area

N

0 500 1,000 2,000 Feet

Advario TIDE

Hydraulic Dredge Placement Area

Shoal Point Island, TX

Geosyntec consultants

Austin, TX | September 2022

Figure 1